Modeling Chaotic Systems with Analog Computing

Het J. Patel, Devansh Modi*, 3rd Year UG (Electronics & VLSI), DA-IICT, Gandhinagar, 382007 India*
Biswajit Mishra, VLSI Architecture Research, DA-IICT, Gandhinagar, 382007 India

As the demand for energy-efficient Artificial Intelligence (AI) systems grows, analog computing is re-emerging as a promising technology. It provides a natural approach to perform large-scale, parallel computations using significantly less power than traditional digital architectures. By leveraging the physics of computation instead of relying on digital abstraction, analog systems can execute massive parallel operations through the physical behavior of electronic components—such as resistors, capacitors, and operational amplifiers—that directly replicate mathematical functions in hardware with remarkable energy efficiency.

Analog AI systems can reduce energy consumption by 10–100× compared to traditional digital accelerators while still achieving acceptable accuracy for solving mathematical equations used in complex systems. However, they face challenges such as limited precision, noise susceptibility, and programmability and scalability difficulties. Ongoing research focuses on hybrid analog-digital architectures [1], where analog computing could become a crucial component for future computing devices.

The proposed work aims to build a configurable analog computing hardware using discrete components (see Fig. 1) to model nonlinear dynamical systems [2]. Each module of the proposed work is designed as a separate circuit, which is then connected with other modules externally based on a specific system being modeled. Fig. 2 illustrates how the modules of the analog computer are interconnected to create a second-order system. The response of our hardware implementation shows good agreement with the model for a second-order system. A key challenge was to implement the integration module with non-zero initial conditions. As a result, the systems were modeled with zero initial conditions, and the non-zero initial condition system design is left as future work.

The proposed hardware will be extended with a digital control system for improved configurability. It will allow for digital management of inputs and connections, eliminating the need for manual connections. A Lorenz attractor model in MATLAB (see Fig. 3) is proposed for future work to demonstrate the feasibility of solving chaotic systems using the proposed hardware.

References:

[1] Rujzl, M.; Polak, L.; Petrzela, J. *Hybrid Analog Computer for Modeling Nonlinear Dynamical Systems: The Complete Cookbook*. Sensors **2023**, *23*, 3599. https://doi.org/10.3390/s23073599.
[2] Rummer, D. I. (1967). *Introduction to analog computer programming.* Wadsworth Publishing Company.

*Both the authors have contributed equally

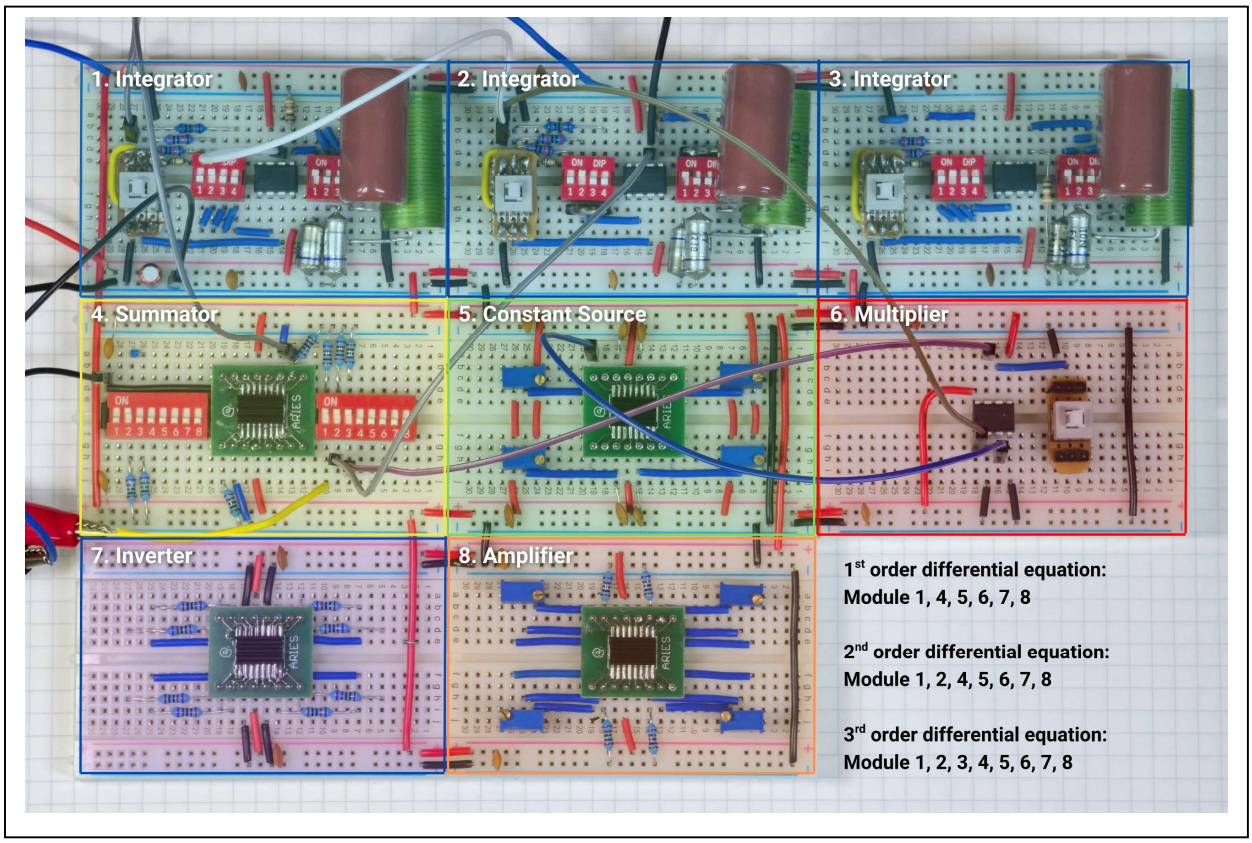

Fig. 1. Building Blocks of Analog Computer Hardware

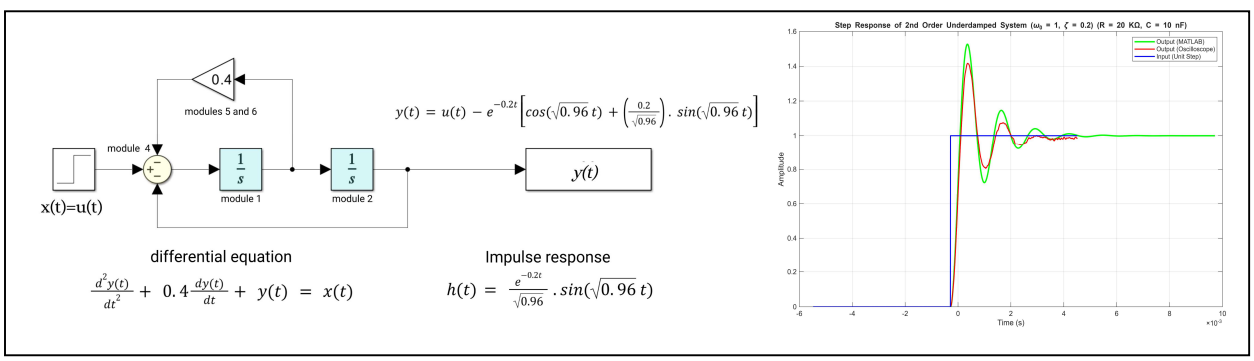

Fig. 2. Second Order Simulation Model and the Unit Step (blue) response from Model (green) & Hardware (Red)

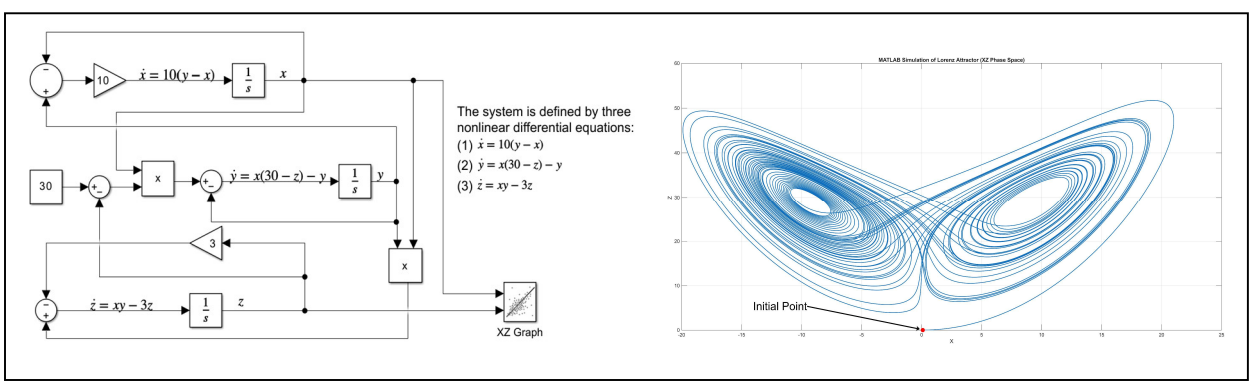

Fig. 3. Lorenz Attractor Model and Output Plot of XZ phase-space